Accuphase

M-6200

MONOPHONIC POWER AMPLIFIER

● Two totally identical power amplifier units driven in parallel ● Output stage features novel high-power transistor devices in a dual 8-parallel push-pull arrangement ● Latest low-noise instrumentation amplifier technology ● MCS+ circuit and current feedback topology in amplification stage ● Support for bridged use of two M-6200 units with even higher output power ● Strong power supply with massive high-efficiency toroidal transformer and large filtering capacitors

Supreme monophonic power amplifier takes the product concept to its ultimate conclusion – Discrete low-noise instrumentation amplifier construction allows fully balanced signal transmission, augmented by MCS+ circuit and current feedback topology for outstanding sound and drastically improved S/N ratio. Hefty power supply and two parallel amplification units, each featuring an 8-parallel push-pull configuration of new high-power transistors designed specifically for audio applications, sustain 1200 watts (music signals) into an ultra-low 1-ohm load. Output stage with further lowered impedance realizes a damping factor of 1,000.

Monophonic power amplifiers from Accuphase have always been at the very forefront of the global high-end audio scene, as demonstrated by many models that have made history. While positioned as a successor to the M-6000, the M-6200 approaches the concept of the power amplifier from a new vantage point. It achieves an unprecedented level of performance that again redefines what a monophonic power amplifier can be.

Retaining the parallel arrangement of two completely identical amplification circuits, the M-6200 drastically lowers the noise floor and improves the damping factor. Parallel operation has the advantage of significantly bolstering output current capability, as well as enabling extremely low output impedance. Furthermore, improvements to the NFB circuit using remote sensing and other technological refinements result in a damping factor in excess of 1,000 and make the amplifier capable of delivering constant current down to extremely low impedance loads. In the input stage, parallel operation along with optimized gain allocation keeps noise levels to an absolute minimum, as illustrated by the astonishing S/N ratio of 127 dB at maximum gain and 133 dB at the -12 dB gain setting. Internally, every aspect of the amplifier has been reworked, and only the very finest parts and materials are used. Two identical amplification units are driven in parallel, each featuring an arrangement of newly developed audio-grade high-power transistors with excellent performance characteristics. This ensures low impedance of the output and realizes constant-voltage speaker drive. It is also possible to use two M-6200 amplifiers in bridged mode for each channel, thereby creating a system with even more impressive power output capability, able to deliver 2,400 watts into a 2-ohm load. Its bold and massive appearance notwithstanding, the M-6200 is a monophonic amplifier that not only impresses through abundant power and effortlessly dynamic performance but that reaches to the very heart of the music, expressing even the most delicate and minute details with stunning realism.

Features and Functions

- **Two units driven in parallel, each with an 8-parallel push-pull arrangement of high-power transistors deliver linear power progression: 1,200 watts (music signals) into 1 ohm, 600 watts into 2 ohms, 300 watts into 4 ohms, or 150 watts into 8 ohms.**
- **Strong power supply with massive high-efficiency toroidal transformer in diecast aluminum enclosure and two large 48,000 µF filtering capacitors.**
- **Balanced inputs shut out external noise interference.**
- **Low-noise instrumentation amplifier topology in discrete configuration allows balanced signal paths.**
- **Printed circuit boards made from glass cloth fluorocarbon resin with low dielectric constant and minimum loss.**
- **MCS+ (Multiple Circuit Summing) and current feedback principle work together for drastically enhanced S/N ratio.**
- **4-stage gain selector (MAX, -3 dB, -6 dB, -12 dB) also minimizes residual noise.**
- **Phase selector accommodates both pin 2 ⊕ and pin 3 ⊕ type balanced input sources.**
- **Bridged operation of two M-6200 units allows upgrade to monophonic amplifier capable of delivering 2,400 watts into 2 ohms (music signals).**
- **Large analog peak-reading meter:**
  - Meter operation and illumination on/off switch
  - Switchable peak hold time: 3 seconds or infinite
- **Protection circuitry uses non-contact semiconductor (MOS-FET) switches with high voltage rating.**
- **Oversize speaker terminals also accept Y lugs.**
- **Remote sensing technology using balanced feedback from a point near the speaker terminals results in lower impedance and higher damping factor.**

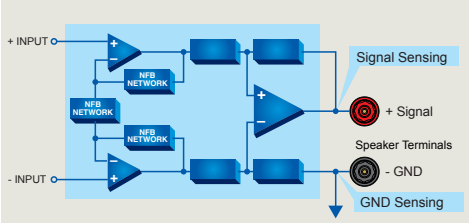

Remote Sensing

Large high-efficiency toroidal transformer

Filtering capacitors with high capacitance

Line/balanced input connectors

Gain selector

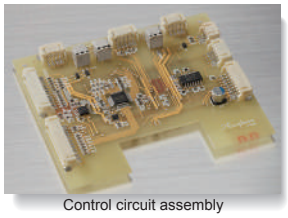
Control circuit assembly

MOS-FET switches

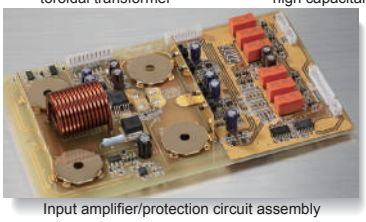
Input amplifier/protection circuit assembly

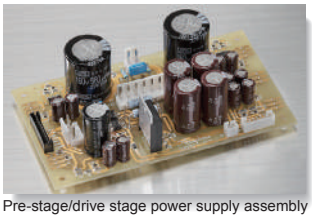
Pre-stage/drive stage power supply assembly

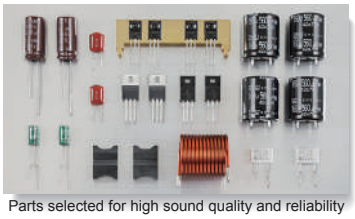
Parts selected for high sound quality and reliability

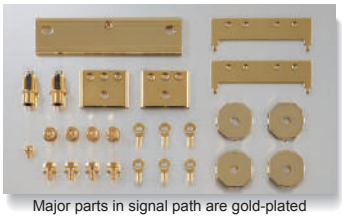
Major parts in signal path are gold-plated

Low-Noise Instrumentation Amplifier Configuration and Further Refined MCS+ Topology

Low-noise instrumentation amplifier in discrete configuration allows balanced signal paths

The balanced input stage circuitry features instrumentation amplifier topology such as used in high-precision measuring equipment. This approach ensures perfectly matched input conditions for the positive and negative side of the signal and thereby allows the realization of high-performance balanced signal transmission.

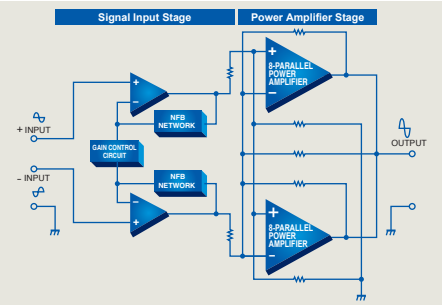

Low-Noise Instrumentation Amplifier Configuration

MCS+ (Multiple Circuit Summing) circuit in amplifier section drastically improves S/N ratio

The input stage of the amplifier section features another Accuphase innovation: MCS+ (Multiple Circuit Summing). This innovative method further reduces noise and at the same time helps to ensure rock-stable performance.

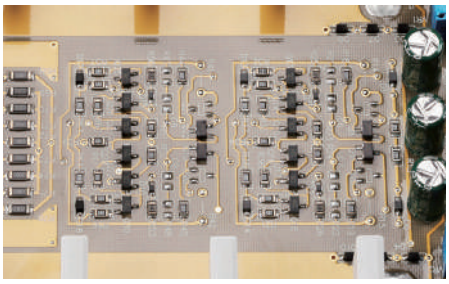

Current feedback principle provides excellent phase characteristics in high frequency range

As shown in the illustration, the M-6200 uses the output signal current rather than voltage for feedback. Since the impedance at the current feedback point is very low, there is almost no phase shift. A minimal amount of NFB therefore results in maximum improvement of circuit parameters. The principle provides excellent stability and is ideally suited to power amplifiers that handle signals ranging from extremely low to dynamic, high-volume levels.

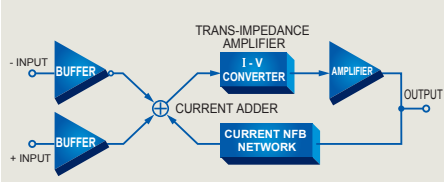

Principle of Current Feedback Amplifier

Output Power Characteristics

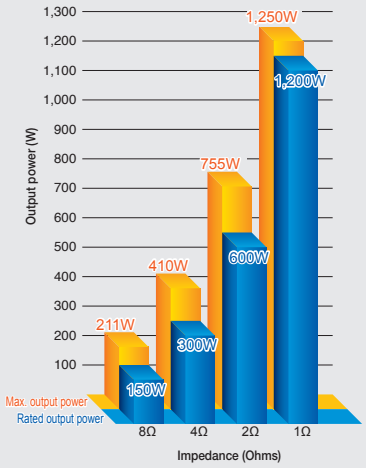

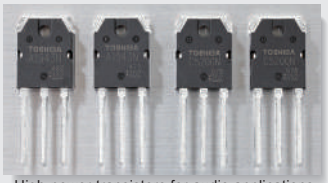

High-power transistors for audio applications

Circuit Diagram of Power Amplification Circuitry

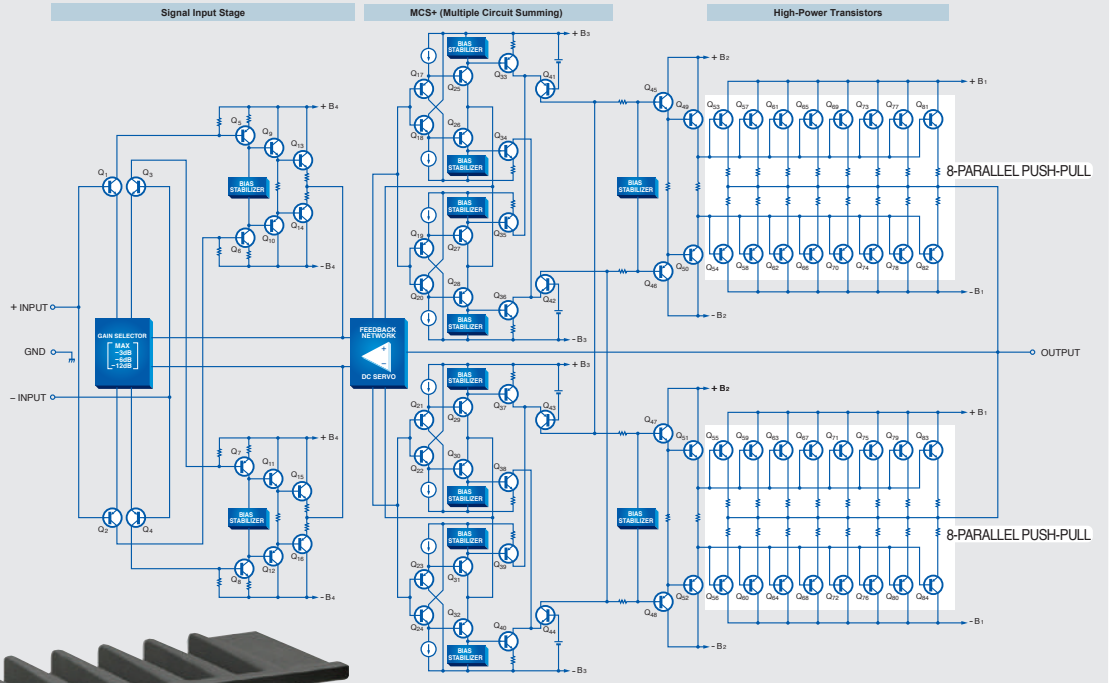

Power Amplifier Assembly

Output stage with 8-parallel push-pull power arrangement of high-power transistors mounted directly to large diecast aluminum heat sink, also comprising MCS+ circuitry and current feedback amplifier. Two completely identical units arranged at left and right are used.

Rear Panel Features

Operation selector allows bridged operation of two M-6200 units.

Phase selector accommodates pin 2 ⊕ and pin 3 ⊕ type balanced connections.

■ Using four M-6200 units, upgrading to bridged operation or bi-amping is possible.

Example for bridged connection

Bridged operation of two M-6200 units allows upgrading to a monophonic amplifier with even higher power.

* For connecting the SPEAKER ⊖ terminals to each other, use speaker cable of the same grade as for other speaker connections.
* Operation selector of left channel/right channel ❶ unit: NORMAL
* Operation selector of left channel/right channel ❷ unit: REVERSE

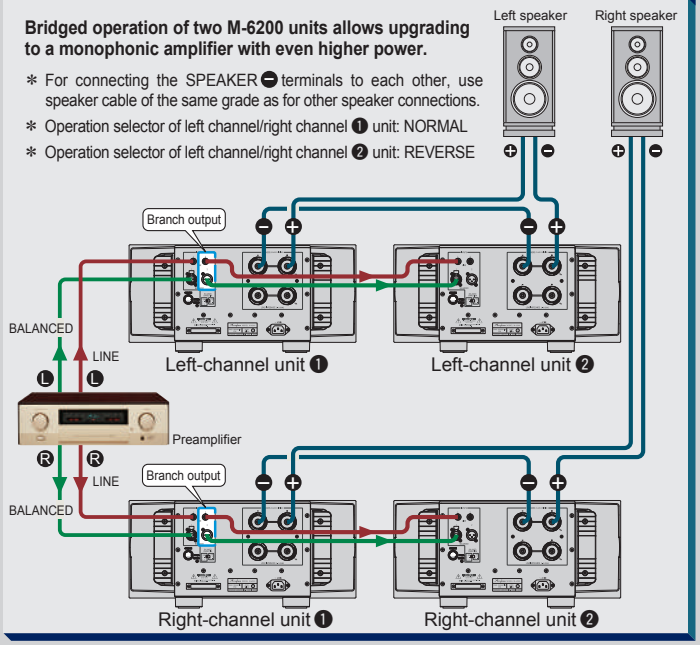

■ Connect the input signal either to the balanced or the unbalanced inputs on all units.

Example for bi-amping connection

In a bi-amped setup, the speaker units for the LOW frequency range and HIGH frequency range are driven by separate amplifiers, for optimum sound quality.

* The speakers must have a built-in crossover network and separate inputs for LOW and HIGH range.
* Set the operation selectors of all four units to NORMAL.

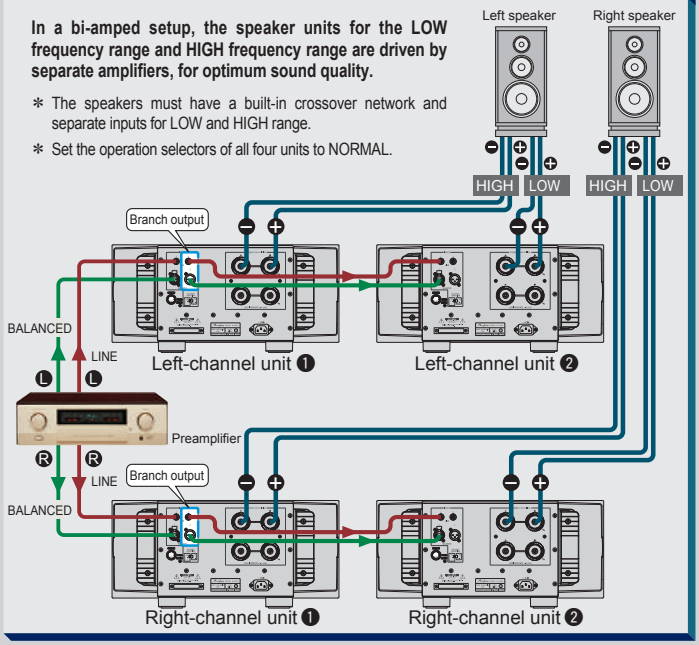

Front panel

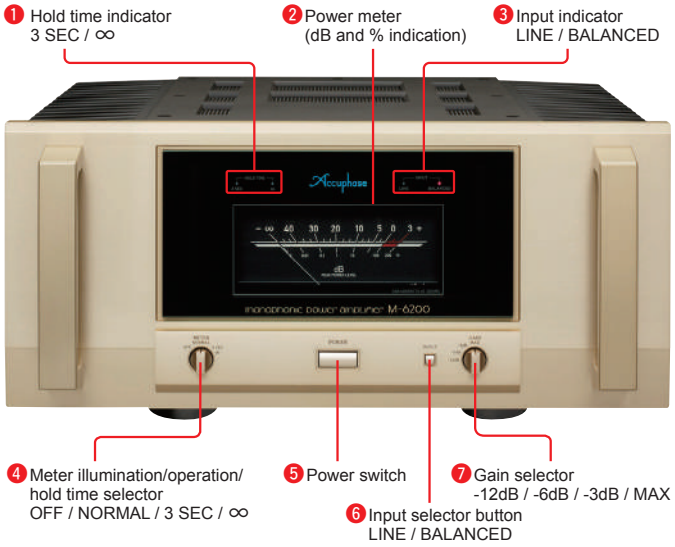

Rear panel

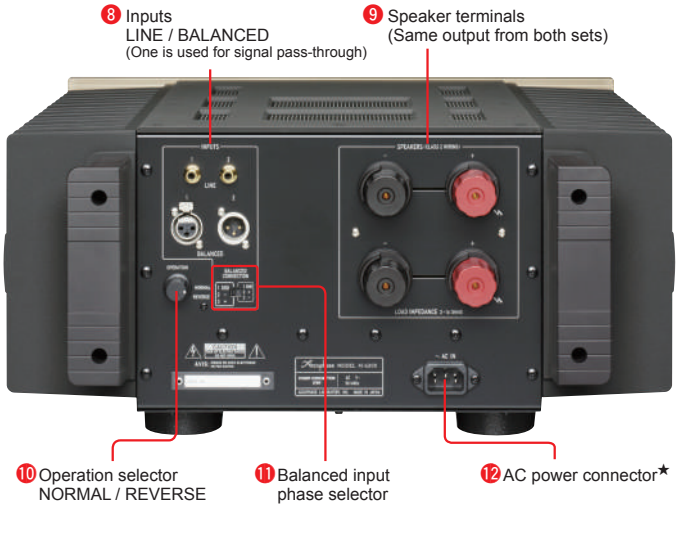

M-6200 Guaranteed Specifications

[Guaranteed specifications are measured according to EIA standard RS-490.]

● **Continuous Average Output Power (20 - 20,000 Hz)**
1,200 watts into 1 ohm
(1-ohm loads allowed with music signals only)
600 watts into 2 ohms
300 watts into 4 ohms
150 watts into 8 ohms
Bridged mode (2 units) 2,400 watts into 2 ohms
(2-ohm loads allowed with music signals only)
1,200 watts into 4 ohms
600 watts into 8 ohms

● **Total Harmonic Distortion**
0.05% with a 2-ohm load
0.03% with a 4 to 16-ohm load

● **Intermodulation Distortion**
0.01%

● **Frequency Response**
At rated continuous average output: 20 – 20,000 Hz +0 -0.2 dB
At 1 watt output: 0.5 – 160,000 Hz +0 -3.0 dB

● **Gain** 28.0 dB (GAIN selector in MAX position)

● **Gain Selection** -12 dB, -6 dB, -3 dB, MAX

● **Output Load Impedance** Continuous output: 2 to 16 ohms
With music signals: 1 to 16 ohms

● **Damping Factor** 1,000

● **Input Sensitivity (with 8-ohm load)**
1.38 V for rated continuous average output
0.11 V for 1 watt output

● **Input Impedance** Balanced: 40 kilohms
Line: 20 kilohms

● **Signal-to-Noise Ratio (A-weighted, with input shorted)**
127 dB (GAIN selector in MAX position)
133 dB (GAIN selector in -12 dB position)
At rated continuous average output

● **Output Level Meter** -40 dB to +3 dB (dB / % indication)
Logarithmic compression scale
Display illumination off switch
Peak hold time select: 3 seconds, ∞

● **Power Requirements** 120/220/230 V AC, 50/60 Hz

● **Power Consumption** 100 watts idle
575 watts in accordance with IEC 60065

● **Maximum Dimensions** Width: 465 mm (183.1")
Height: 220 mm (86.6")
Depth: 499 mm (196.5")

● **Mass** 40.2 kg (88.6 lbs) net
50.0 kg (110.2 lbs) in shipping carton

Remarks

★ *This product is available in versions for 120/220/230 V AC. Make sure that the voltage shown on the rear panel matches the AC line voltage in your area.*
★ *230 V version has an Eco Mode that switches power off after 120 minutes of inactivity.*
★ *The shape of the AC inlet and plug of the supplied power cord depends on the voltage rating and destination country.*

Supplied accessory
● **AC power cord**

Accuphase
ACCUPHASE LABORATORY, INC.

● The specifications and appearance of this product are subject to change without notice.

http://www.accuphase.com

D1505Y PRINTED IN JAPAN 850-2191-00(B1)